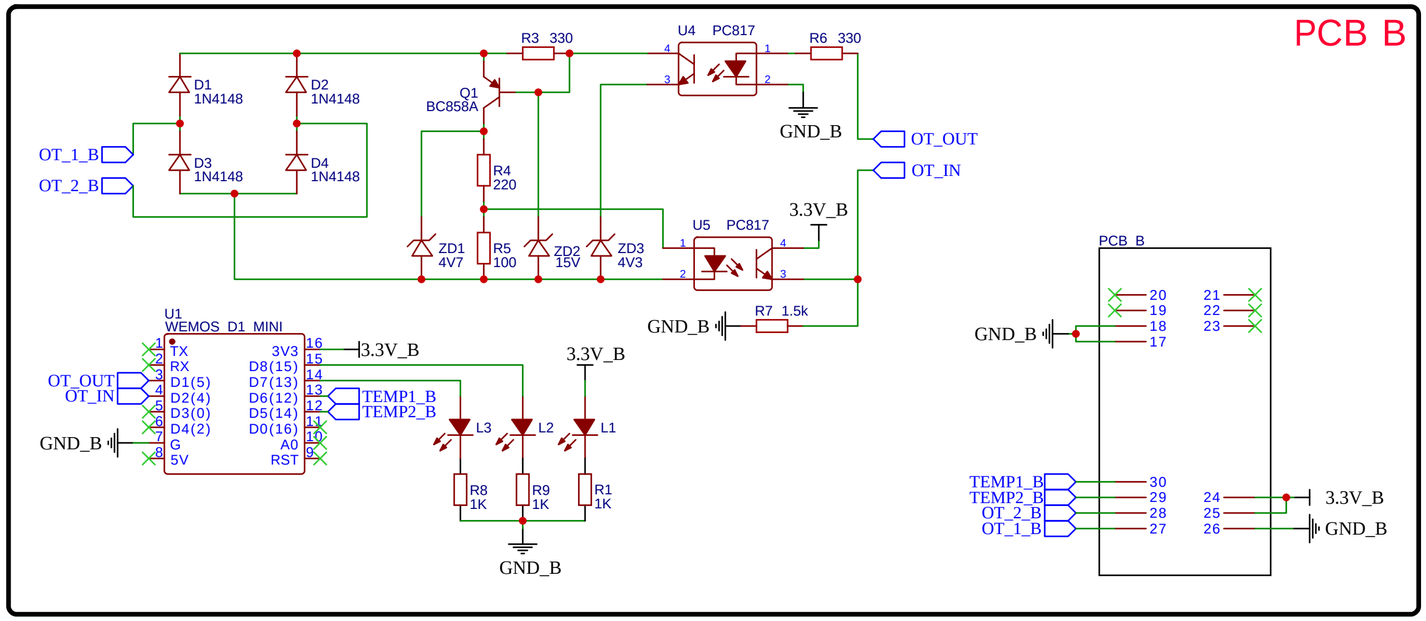

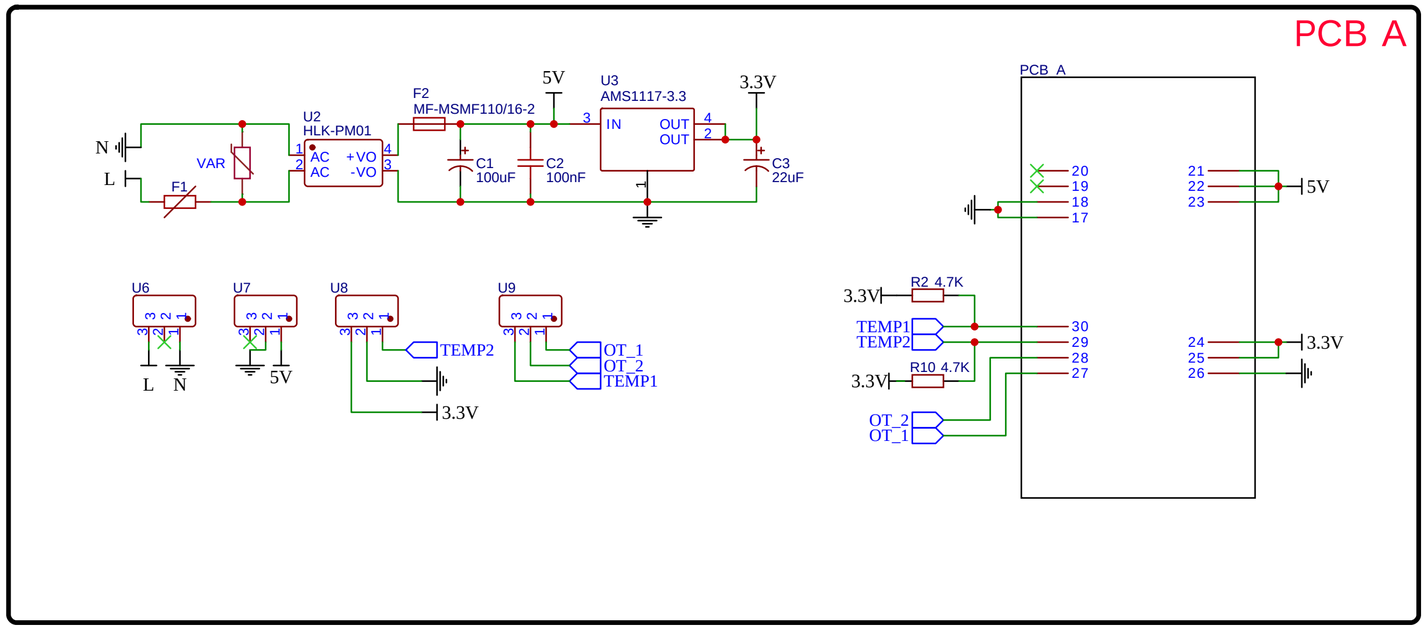

TITLE:	REV: 1.4
Company:	Sheet: 1/1
Date: 2024-01-17 Drawn By:	