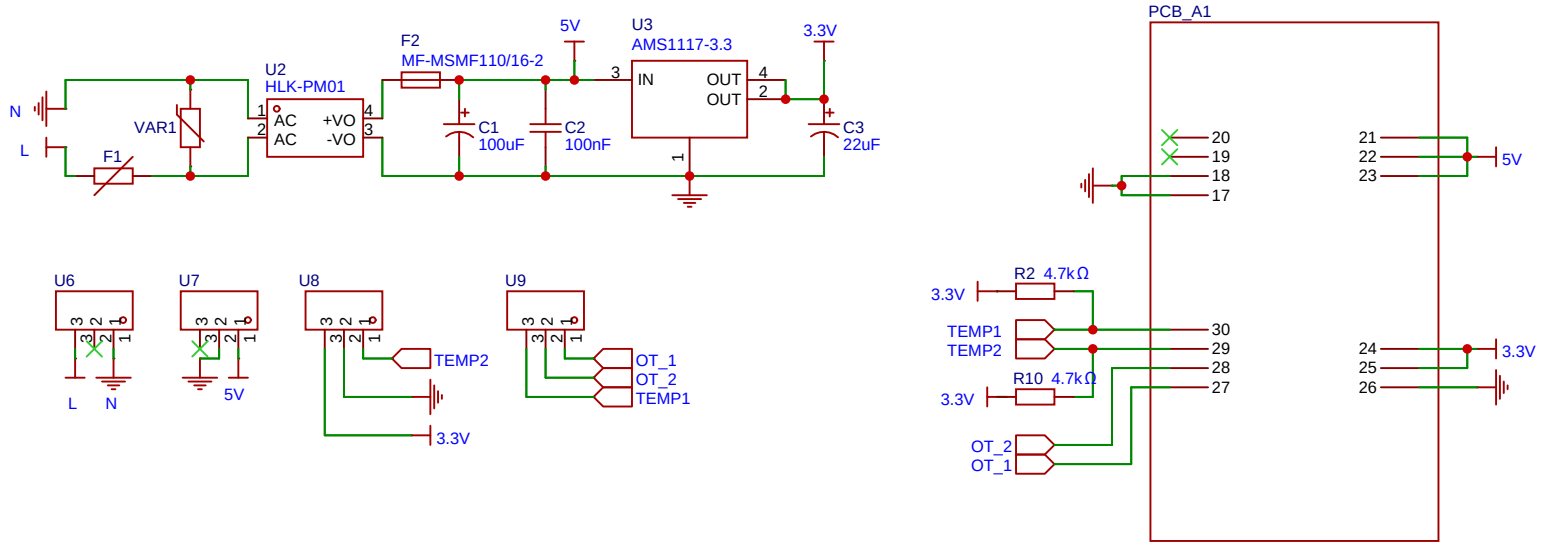

Schematic	otgateway	Update Date	2024-09-01
		Create Date	2024-08-27
Page	Sheet_A	Part Number	
Drawn	Laxilef	OpenTherm Gateway	
Reviewed			
		VER	SIZE	PAGE 1 OF 2
EasyEDA		V1.4.1	A4	

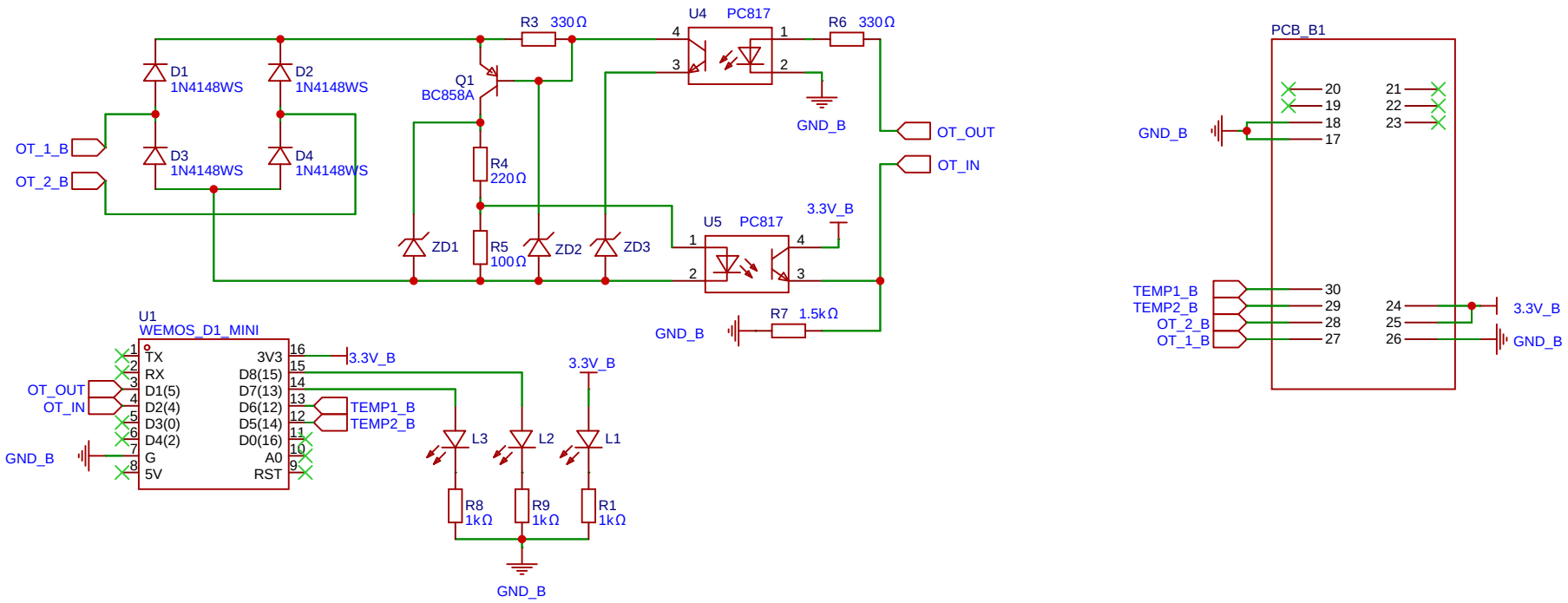

Schematic	otgateway	Update Date	2024-09-01
		Create Date	2024-08-27
Page	Sheet_B	Part Number	
Drawn	Laxilef	OpenTherm Gateway	
Reviewed			
		VER	SIZE	PAGE 2 OF 2
EasyEDA		V1.4.1	A4	