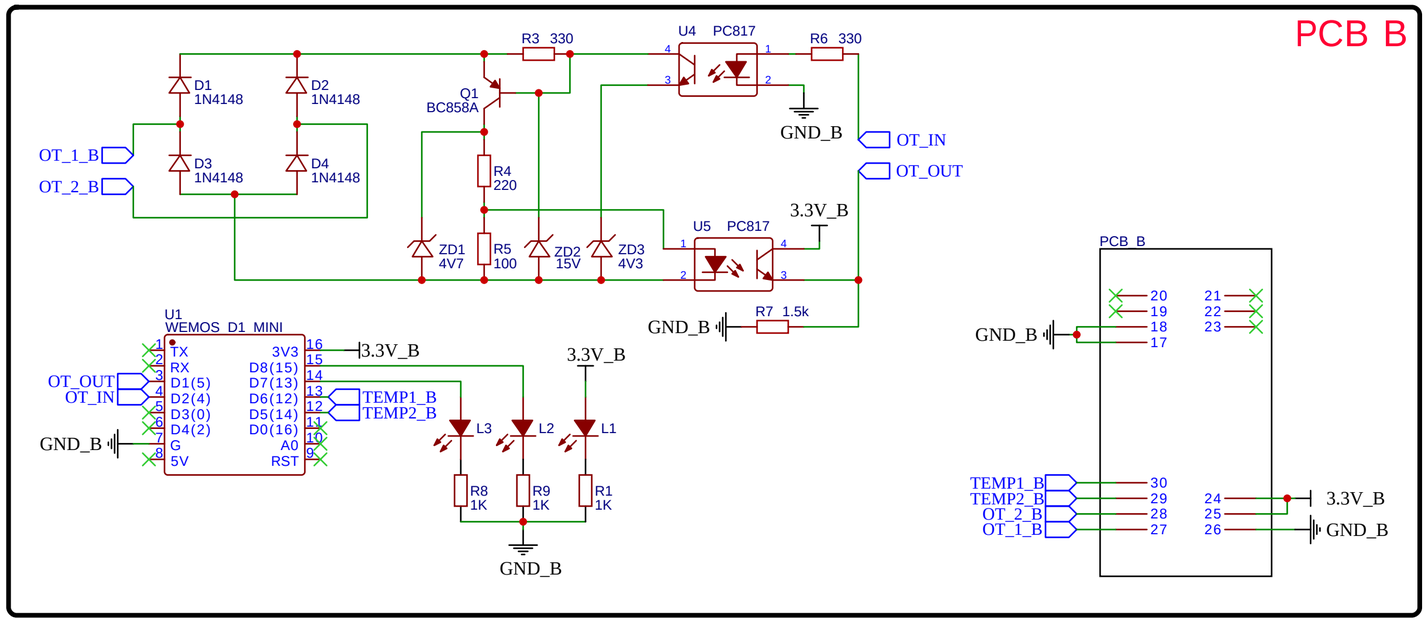

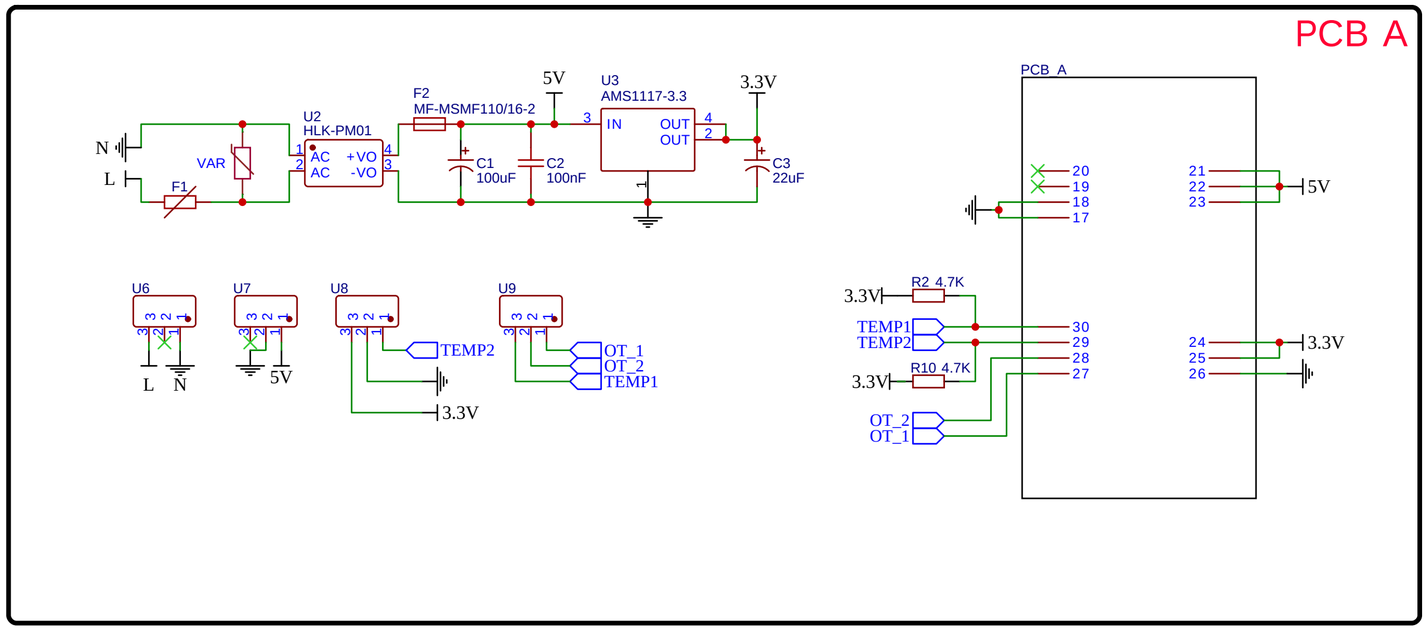

TITLE:		REV: 1.0
	Company:	Sheet: 1/1
	Date: 2022-11-23 Drawn By:	