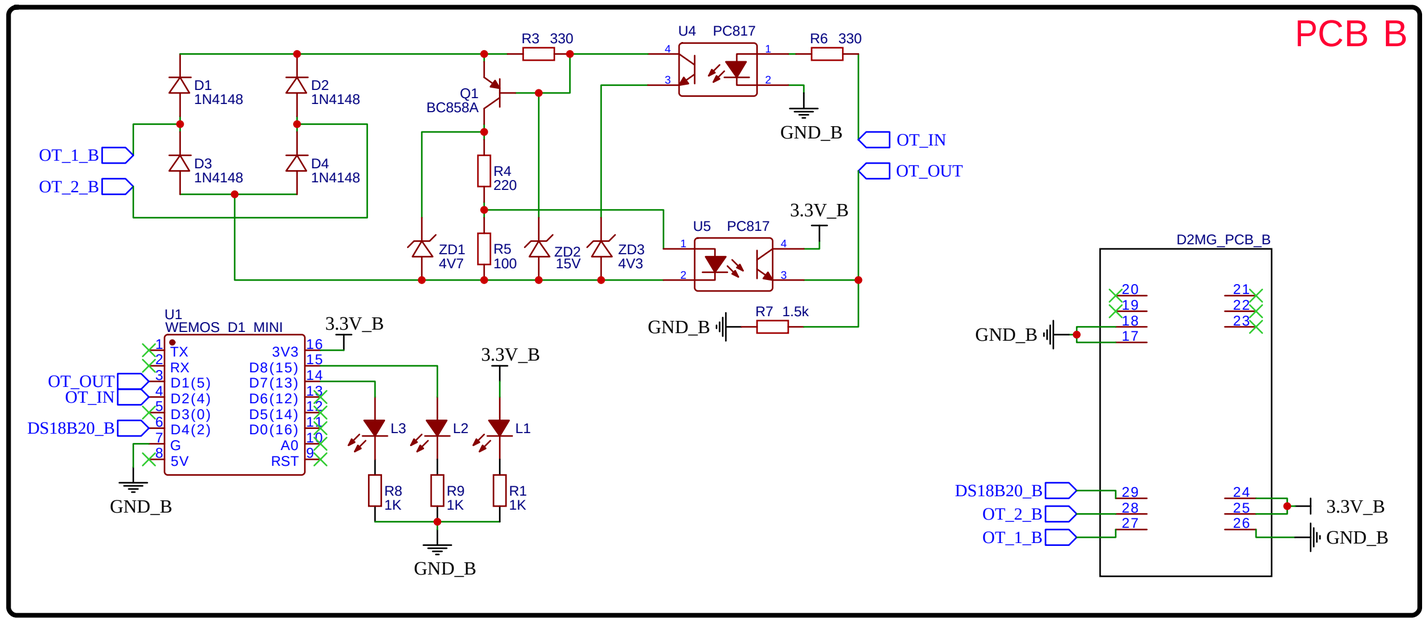

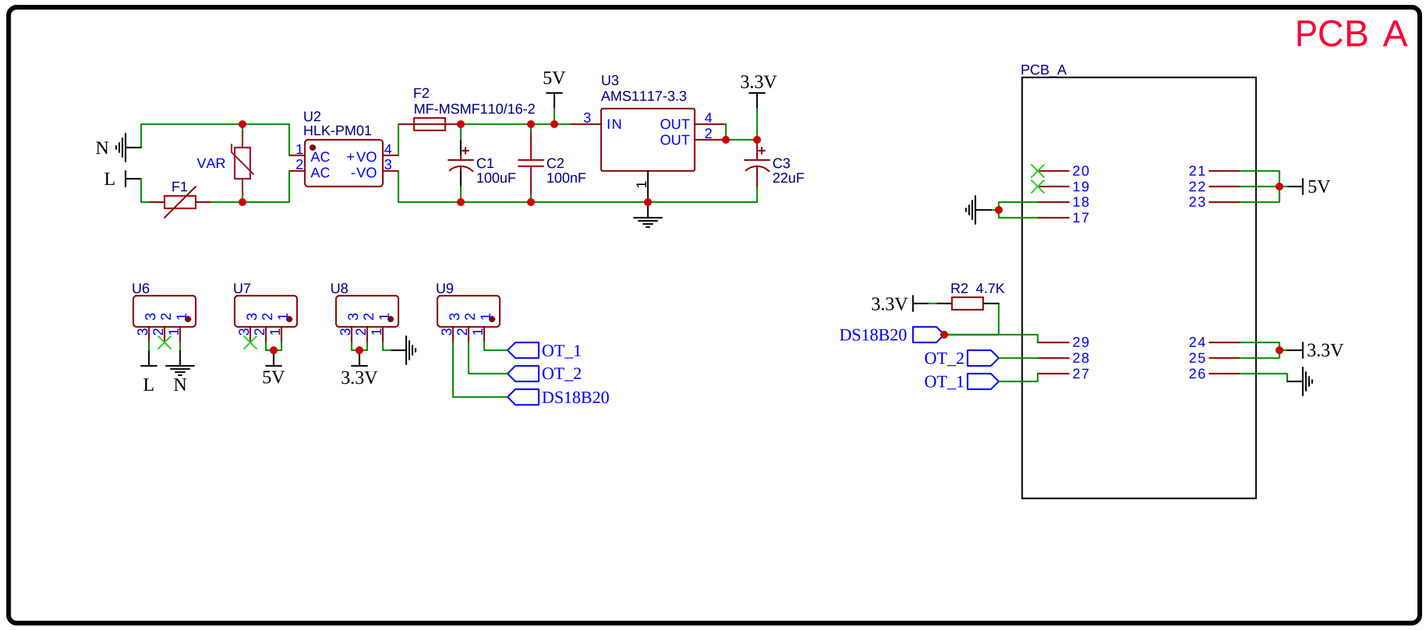

TITLE:	REV: 1.0
Company:	Sheet: 1/1
Date: 2022-11-23 Drawn By:	